Hoshizaki reserves the right to change specifications without notice.

Item # _____

Project: _____

Qty: _____

*AutoCad available on KCL

# HCD-500/1000B

## ICE BAGGING SYSTEM

**HCD-500/1000B**
**10/14**
**Item # 13237**

**DIMENSIONS**
**W x D x H**

| | |
|---|---|
| **HCD-500B** | 30 x 36 x 71 |
| **HCD-1000B** | 48 x 36 x 71 |

**HCD-500B**
Ice Bagging System
Shown
with a KM-901MRH

**HCD-1000B**
Ice Bagging System

### HCD-500B

- Ice storage capacity of 647 lbs. - ideal for limited space
- Safety overload lighted reset button

### HCD-1000B

- Ice storage capacity of 1078 lbs.
- Equipped with Dual Agitators for easier ice management
- Built-in recovery safety torque overload

### HCD- 500/1000B

- Unit has an ice drop rate of 120 lbs. per minute
- All stainless steel exterior finish
- Superior seamless poly liner unlike competitor units
- Stainless steel auger and agitator
- Front ice shovel door
- Stainless steel adjustable bag shelf
- 48" heavy duty ice paddle shipped with every dispenser
- Safety interlock door switch prevents operation when door is open
- 24V foot activated pedal
- 115v/60Hz/1 phase power supply

*Kloppenberg Product*

**Warranty**

**2 year P&L warranty through Kloppenberg.**
Valid in United States, Canada, Puerto Rico, & U.S. Territories. Contact Kloppenberg for warranty in other countries.

ISO9001·ISO14001

© HOSHIZAKI AMERICA, INC.

618 Hwy. 74 S., Peachtree City, GA 30269 | TEL 1-800-438-6087 | FAX 1-800-345-1325 | www.hoshizaki.com

# HCD-500/1000B
# ICE BAGGING SYSTEM

**DIMENSIONS**
**W x D x H**
**HCD-500B**
30 x 36 x 71
**HCD-1000B**
48 x 36 x 71

- Ice bagging system

## SPECIFICATIONS

| Model Number | Amperage | Min. Circuit Ampacity | Shipping Weight |
|---|---|---|---|
| HCD-500B | 8.4 | 10.8 | 510 lbs. |
| HCD-1000B | 8.4 | 10.8 | 590 lbs. |

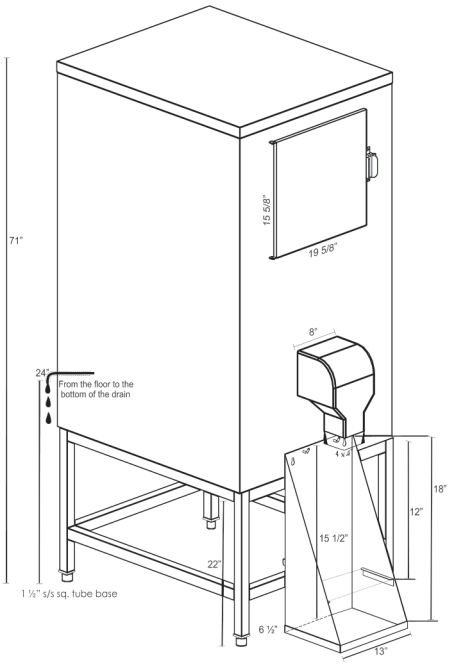


HCD-500B

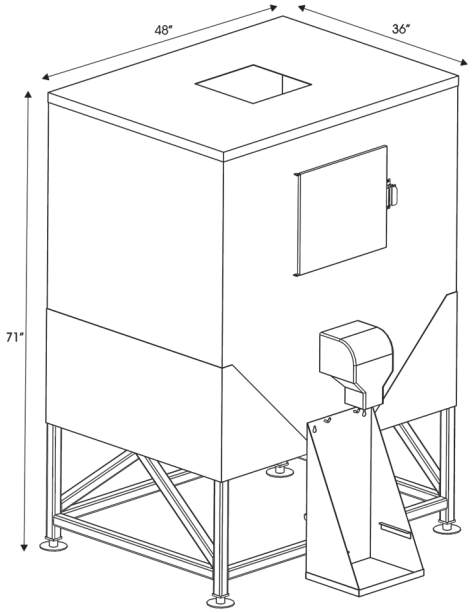


HCD-1000B

## ELECTRICAL & PLUMBING / HCD-500/1000B

- 115V/60/1

ISO9001 • ISO14001

© HOSHIZAKI AMERICA, INC.

618 Hwy. 74 S., Peachtree City, GA 30269 | TEL 1-800-438-6087 | FAX 1-800-345-1325 | www.hoshizaki.com | Printed in U.S.A.